Application

MD-O Solutions for off-road applications

MD-O package

TRIDEC offers a unique range of products for off-road vehicles, such as used in agriculture, forestry or earthworks.

- Robust, torsion-free and highly stable hydraulic axle-suspension, for 10t axle-loads
- Steering system for 1 or 2 axles with alignment functionality
- Rubber-suspended drawbar with hydraulic support leg, possible to combine with TRIDEC steering system
- Modular drawbar for hydraulic drawbar-suspension, including hydraulic support leg, possible to combine with TRIDEC steering system and top-cylinder
- Semi-automatic ride-height control
- Automatic ride-height control by Tritronic remote:
  - ride-height control (suspension & drawbar)
  - 1 or more lift-axles
  - traction assistance
  - load indication system
  - control top-cylinder
  - level-control
  - slope-control
  - extra functions (hydraulic & electric)

The MD-O products contribute to a very terrain-worthy combination, with unknown stability, also at high speeds. The steering system provides the required manoeuvrability. The hydraulic suspended drawbar assures the tractor is always provided with sufficient drawbar-load and traction. Tritronic allows the driver to control vital vehicle functions, by a one single powerful remote, with the greatest ease.

Noticeable savings

- Time
- Tyre wear
- Vehicle maintenance
- Vehicle damage
- Fuel consumption

TRIDEC, Transport Industry Development Centre B.V., Ekkersrijt 6030, 5692 GA Son – The Netherlands
T +31 499 49 10 50, F +31 499 49 10 60, info@tridec.com, www.tridec.com

MD-O axle suspension

MD-O axle suspension

The MD-O heavy-duty hydraulic pneumatic axle-suspension is perfectly suitable for challenging conditions, as found in off-road situations.
In contradiction to most conventional 4-points off-road suspensions, the robust MD-O 3-point suspension does not produce internal torsion forces. This unique concept makes ripped suspension belong to the past and assures a long lifetime, even in the toughest circumstances and with 10t axle load.
All tyres can follow the rugged terrain without losing contact, thanks to large suspension-travel and huge swivel-movement.
A smart crosswise hydraulic connection provides a revolutionary roll-stability, allowing a fully laden trailer to be transported at high speeds and trough curvy situations safely.

Technical specification

General

- Standard 10t axle-load
- Modular system for 1 up to 4 axle-lines
- Versions for tipper and container chassis
- Good compensation characteristics thanks to large suspension travel: e.g. 125mm in / 125mm out
- Swivel angle: up to 13.5° (swivel travel: up to 500mm)
- Several axle-distances, tracks and chassis-dimensions possible (see table)
- Maximal ground clearance: axle-body lowest point
- Suitable for most off-road axle-types and makes: rigid, self-steered king-pin and central king-pin axles, with axle-body []120, 130, 140 150mm
- Double acting cylinders allow features such as: lift-axle, traction assistance and overload prevention
- Rubber low maintenance bearings in all joints, cylinders, triangle and Panhard-rod
- Perfectly combinable with TRIDEC steering system, drawbar and Tritronic trailer management system
- Triangles and Panhard-rod KTL treatment
- Paint-coated cylinders
- Nikrom piston-rods

TRIDEC, Transport Industry Development Centre B.V., Ekkersrijt 6030, 5692 GA Son – The Netherlands
T +31 499 49 10 50, F +31 499 49 10 60, info@tridec.com, www.tridec.com

MD-O [1900]

Technical specification

Feature	Value
Axle load	10t
Cylinders	100/70mm, stroke 200 or 250mm
Suspension travel	250mm
Swivel angle	Up to 13.5° (swivel travel: up to 500mm)
Weight per axle-line	240kg
Suitable axles	Rigid, self-steered & central king-pin axles, axle-body []120, 130, 140, 150mm

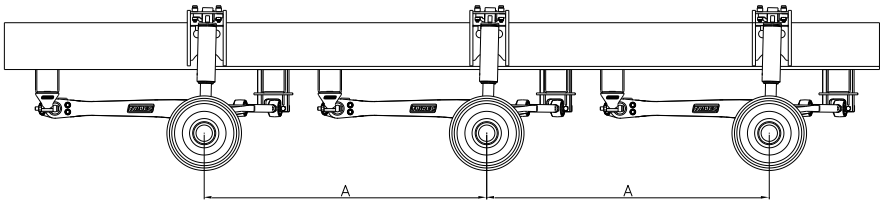

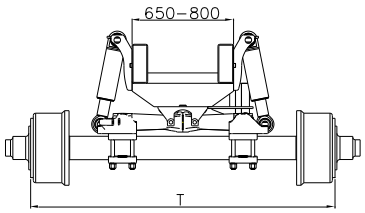

1901

Spoor T (mm)	As afstand A (mm) >1600
1950	✓
2050	✓

TRIDEC, Transport Industry Development Centre B.V., Ekkersrijt 6030, 5692 GA Son – The Netherlands
T +31 499 49 10 50, F +31 499 49 10 60, info@tridec.com, www.tridec.com

MD-O [1900]

Components

Code	Description
1901	1 axle line MD-O 10T with cylinder clamps
1902	2 axle lines MD-O 10T with cylinder clamps
1903	3 axle lines MD-O 10T with cylinder clamps
1904	4 axle lines MD-O 10T with cylinder clamps

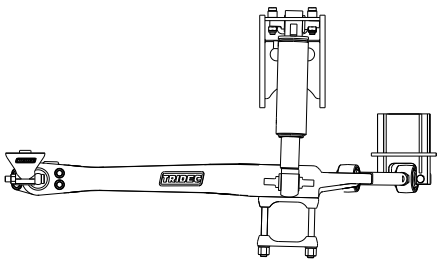

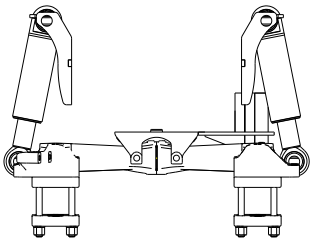

1902

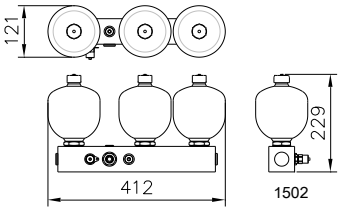

1502

Triangle
- Caster triangle
- Several width available
- Low maintenance rubber bearing
- Axle seats for axle-body []120, 130, 140 150mm
- KTL treated

Panhard-rod
- Low maintenance rubber bearings
- Alignment feature
- KTL treated

Suspension cylinders
- Double acting cylinder, for lift axle, traction-assistance and over-load prevention
- Low maintenance rubber bearings
- Nikrom piston-rods
- Paint-coated

Consoles
- Non-treated: to be welded underneath the chassis cross-members

Cylinder clamps
- Non-treated: to be welded onto the chassis

Accumulator-set
- State-of-the-art accumulators, KTL treatment
- Pre-tension set customer / vehicle specific
- Accumulators positioned at aluminium block with several (additional) connectors
- Integrated connectors for cross-wise hydraulic connection
- Integrated connector for pressure sensor (at protected position)

TRIDEC, Transport Industry Development Centre B.V., Ekkersrijt 6030, 5692 GA Son – The Netherlands
T +31 499 49 10 50, F +31 499 49 10 60, info@tridec.com, www.tridec.com

Application

MD-O steering system

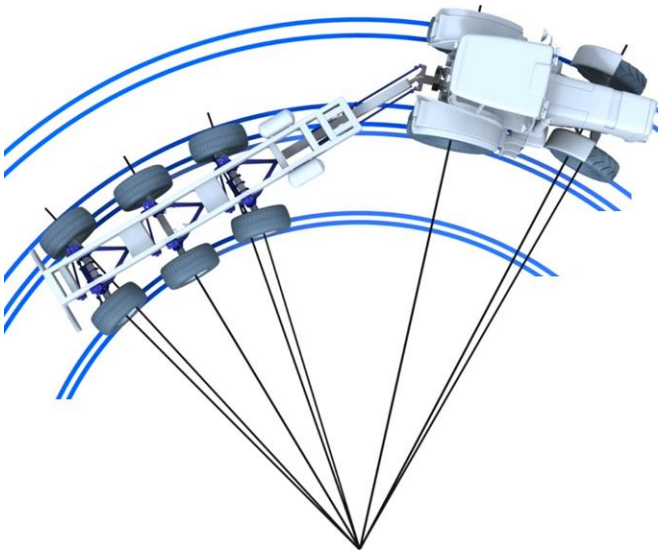

MD-O steering system

Expanding the MD-O suspension with an hydraulic steering system allows for steering the trailer's last and optionally first axle. This increases manoeuvrability and reduces tyre wear and fuel consumption. Different to self-steered constructions, the command steering system is not only action going forwards, but also in reverse. With one single press at the remote's button, the steering is aligned, e.g. after hitching.

Steering principal

The MD-O steering system consists of a single hydraulic displacement system. While making a turn, the movement between tractor and trailer activates a command cylinder. The displaced oil is transmitted to a slave cylinder, mounted onto the steered axe. Short track-rods, connected to the axle's steering arms make the wheels turn.
The two axle steering system is equipped with an additional set of command and slave cylinders.

TRIDEC, Transport Industry Development Centre B.V., Ekkersrijt 6030, 5692 GA Son – The Netherlands
T +31 499 49 10 50, F +31 499 49 10 60, info@tridec.com, www.tridec.com

Technical specification

Components

Code	Description
1910	Steering system 1 axle
1911	Steering system 2 axles

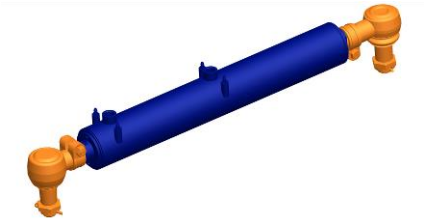

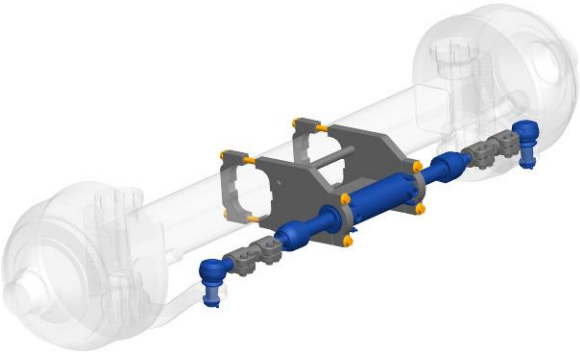

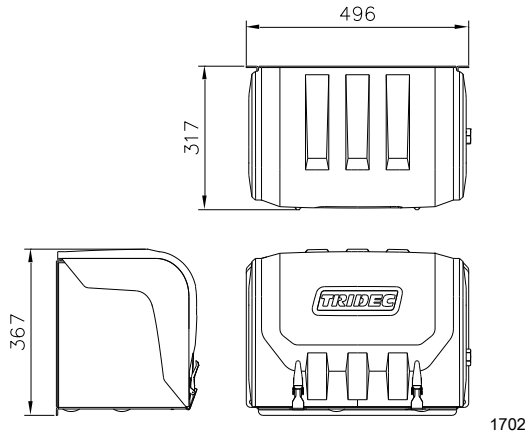

Command cylinder

The standard steering system is supplied with one command cylinder per steered axle (to be integrated into the drawbar by the trailer manufactures).

- Double ended cylinder
- Paint-coated
- Nikrom piston rods
- Low maintenance ball-joints
- Ball-joint mounting plate (to be welded)

Slave cylinder

- One slave cylinder per steered axle
- Double ended cylinder
- Mounting bracket and ball-joints KTL treated
- Paint-coated cylinders
- Galvanised track-rods
- Nikrom piston-rods
- Low maintenance ball-joints
- Easy alignment by turning the ball-joints in or out of the track-rods

Control-box

The hydraulic steering system comes with a stainless steel control-box, where the following functions and components are combined:

- tank
- relief valves
- steering valves
- pressure sensors
- hand pump
- air bleeders
- low pressure warning light
- filters
- accumulator
- all hydraulic connections are color-coded
- alignment by cable remote-control (5, 10 or 20m, with state-of-the-art gilded Souriau connectors
- steering system hydraulic oil is completely separated from the tractor's oil

TRIDEC, Transport Industry Development Centre B.V., Ekkersrijt 6030, 5692 GA Son – The Netherlands
T +31 499 49 10 50, F +31 499 49 10 60, info@tridec.com, www.tridec.com

Application

TD-O drawbar

TD-O drawbar

Complementary to the MD-O suspension, TRIDEC supplies a modular drawbar, equipped with hydraulic support-leg. The drawbar is available in two versions: rubber suspended and suitable for hydraulic suspension. Both can be equipped with an integrated TRIDEC steering system.
Additionally, the hydraulic drawbar can be expanded with hydraulic suspension, automatic drawbar height-control and top-cylinder.
All systems contribute to the vehicle's terrain-worthiness, as the tractor is always provided with sufficient traction, without the need for additional front-weights. Temporarily, the top-cylinder can provide even more traction, to overcome difficult situations.
Overloaded and relieved axles no longer occur, thanks to the drawbar's large suspension travel, which also drop pulling force and fuel consumption. The maintenance-poor drawbar is completely assembled by TRIDEC, and is easily installed.

Technical specification

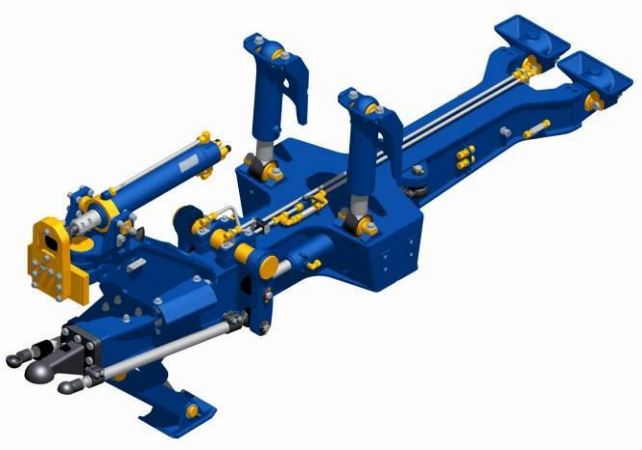

General

- Completely assembled by TRIDEC
- Equipped with hydraulic support-leg
- ROCKINGER Calotte Ø80mm coupling
- Expandable with integrated TRIDEC steering system (1 or 2 steered axles)
- Protection plates for steering rods
- Low maintenance bearing constructions
- Two versions; rubber-suspended and prepared for hydraulic suspension
- Optional hydraulic drawbar suspension
- Optional automatic drawbar height-control
- Optional top-cylinder
- Top-cylinder compensated with hydraulic drawbar suspension, also dis-connectable, temporarily possible to increase pressure for additional traction
- Duct for drive-shaft
- Easy installation by supplied mounting-means
- Approval according E4-55R-010759-00
  (hydraulic suspended drawbar)

TRIDEC, Transport Industry Development Centre B.V., Ekkersrijt 6030, 5692 GA Son – The Netherlands
T +31 499 49 10 50, F +31 499 49 10 60, info@tridec.com, www.tridec.com

MD-O [1900]

Feature	Value
Drawbar load (S-value)	max. 4t (please note coupling specifications)
Drawbar pull force (Dc-value)	max. 106.5kN (please note coupling specifications)
Hydraulic drawbar suspension	100/70 cylinders, 200mm stroke
Drawbar suspension stroke	420mm
Max. vertical angle	2x 25˚
Max. tow angle	2x 60˚
Coupling	ROCKINGER Calotte Ø80mm (Dc=97,1kN, S=4,5t)
Weight	733kg (hydraulic version, full options)

Drawbar (hydraulic suspended, full options)

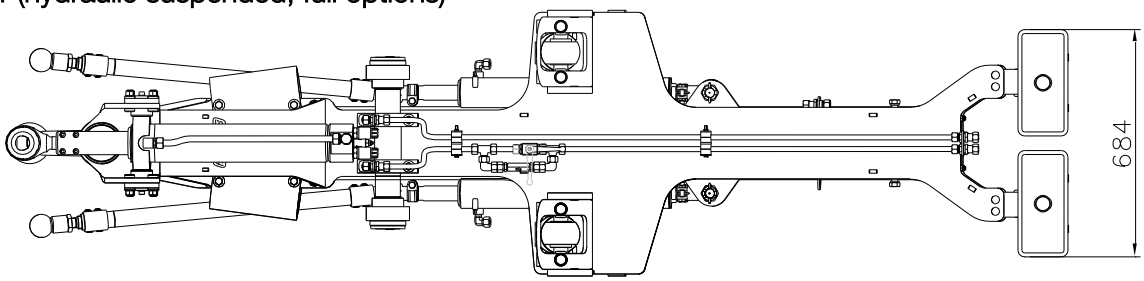

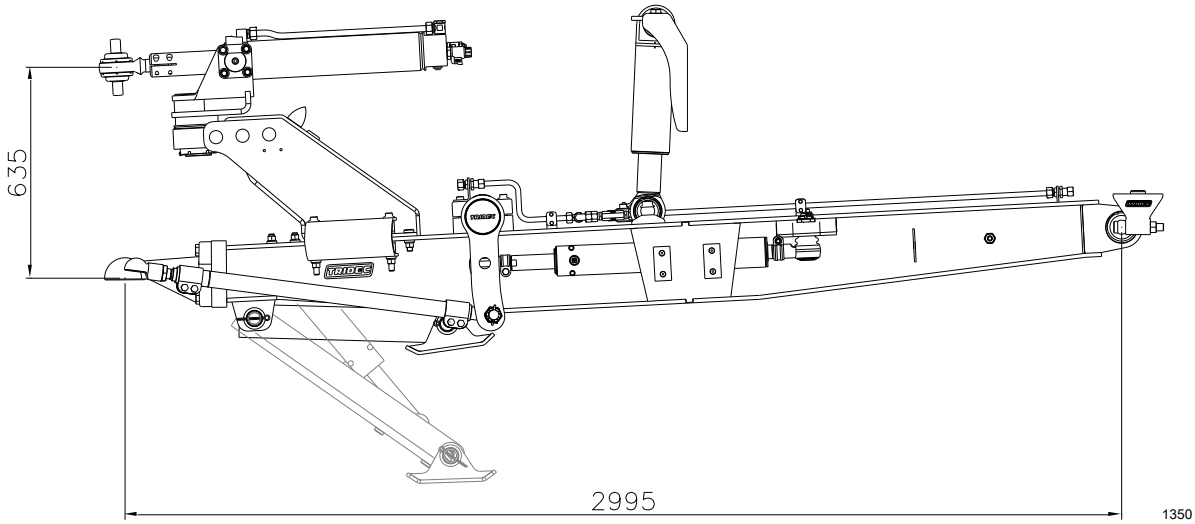

Accumulator sets

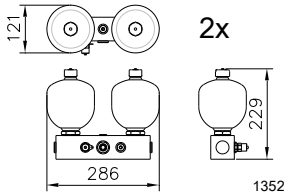

Note: The top-cylinder ladder mounting plate, to connect to the tractor, is designed customer specific

TRIDEC, Transport Industry Development Centre B.V., Ekkersrijt 6030, 5692 GA Son – The Netherlands
T +31 499 49 10 50, F +31 499 49 10 60, info@tridec.com, www.tridec.com

Components

Code	Description
1951	Drawbar TD-O, including hydraulic landing leg. Rubber suspended

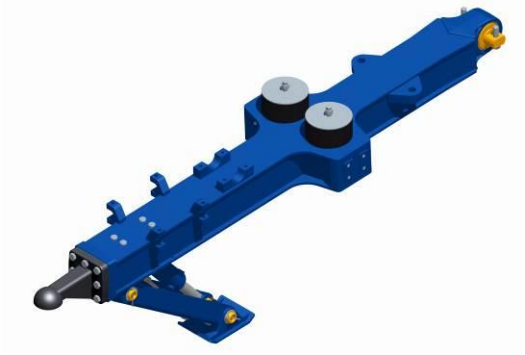

Drawbar rubber suspended

- ROCKINGER Calotte Ø80mm coupling
- Hydraulic support-leg with cylinder, hose-burst-protection and flow-control valves
- Rubber suspension
- Low maintenance bearing constructions
- Easy installation
- KTL treatment

Code	Description
1950	Drawbar TD-O, including hydraulic landing leg. Prepared for hydraulic drawbar suspension

Drawbar prepared for hydraulic suspension

- Max. 4t drawbar load
- D-value 131kN
- ROCKINGER Calotte Ø80mm coupling
- Hydraulic support-leg with cylinder, hose-burst-protection and flow-control valves
- Prepared for hydraulic drawbar suspension
- Low maintenance bearing constructions
- Approval according E4-55R-010759-00
- Easy installation
- KTL treatment

Code	Description
1912	Steering system 1 axle in combination with drawbar TD-O
1913	Steering system 2 axles in combination with drawbar TD-O

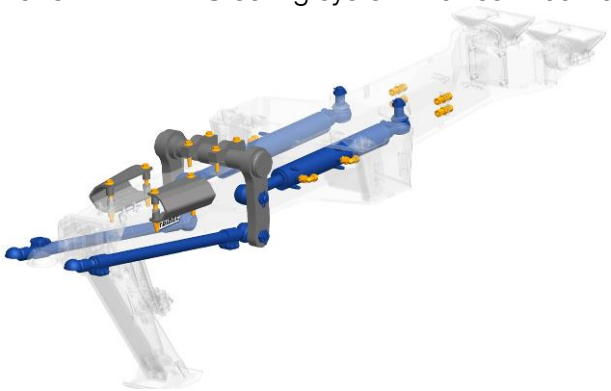

Steering system

- Option for code 1950 & 1951 'rubber and hydraulic suspended drawbar'
- One single command cylinder per steered axle
- Steering-levers with transmission ratio for tractor-trailer angles up to 60°
- Low maintenance bearing constructions
- Protection plates for steering rods
- Double ended cylinder
- Nikrom piston rods
- Paint-coated cylinders
- KTL treatment
- Galvanised track-rods, with ROCKINGER 50mm couplings, length adjustable

TRIDEC, Transport Industry Development Centre B.V., Ekkersrijt 6030, 5692 GA Son – The Netherlands
T +31 499 49 10 50, F +31 499 49 10 60, info@tridec.com, www.tridec.com

Code	Description
1955	Hydraulic drawbar suspension including mounting parts and accumulators

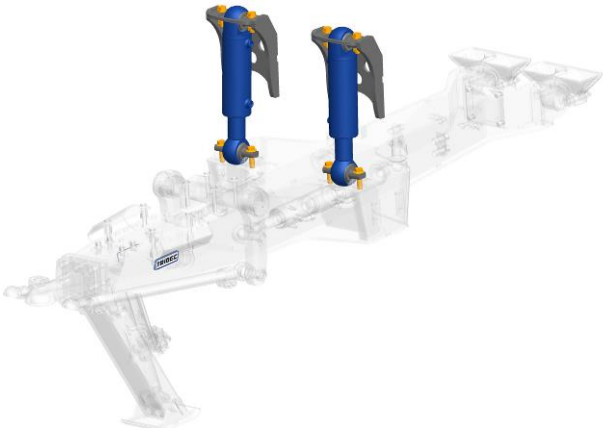

Hydraulic drawbar suspension

- Option for code 1350 'drawbar prepared for hydraulic suspension'
- 100/70 cylinders, 200mm stroke
- 420mm drawbar suspension travel
- Low maintenance bearing constructions
- Cylinder mounting brackets
- 2 Accumulator
- Paint-coated
- Nikrom piston rods

Code	Description
1960	Top cylinder TD-O, including ladder mounting plate and mounting support drawbar

Top cylinder

- Option for code 1955 'drawbar prepared for hydraulic suspension'
- Hydraulic compensation with drawbar suspension (dis-connectable)
- Pressure (traction) temporarily increasable
- 480mm stroke for 2x 25° vertical angle
- Mounting support bracket with duct for drive-shaft
- Ladder mounting plate
- Integrated control- and overpressure-valves
- Tap to adjust cylinder length, for (de-)coupling
- Low maintenance bearing constructions
- Pre-installed hydraulic lines
- KTL treated
- Nikrom piston rods

TRIDEC, Transport Industry Development Centre B.V., Ekkersrijt 6030, 5692 GA Son – The Netherlands
T +31 499 49 10 50, F +31 499 49 10 60, info@tridec.com, www.tridec.com

Application

Semi-automatic height-control

Semi-automatic height-control

Controlling the MD-O's suspension and ride-height is possible by a simple and robust semi-automatic control system. With one single press at the button, of the cable remote, the suspension is set to its correct ride-height. LED-indications informs when ride-height is reached.
The combined remote also controls the alignment of the steering system (if applicable).

Components

Code	Description
1915	Semi-automatic height control MD-O with stainless steel box + cover

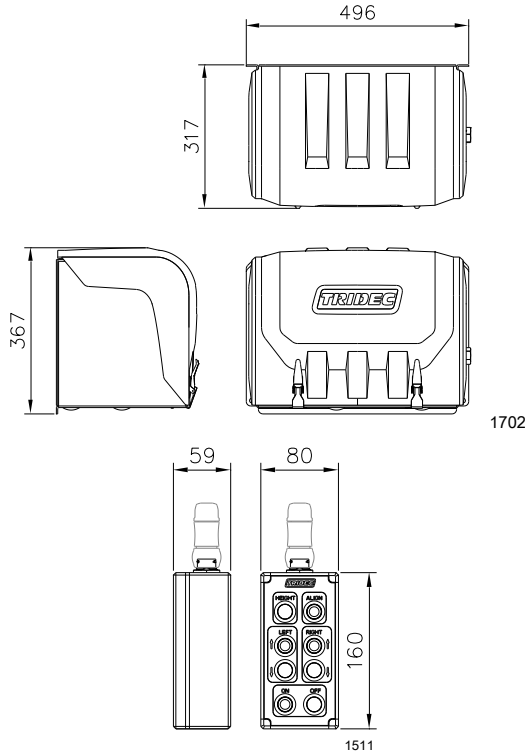

Remote

- Robust cable remote control
- Controlling:
  - Ride-height (with LED indication)
  - Suspension height-control (Left and Right)
  - Alignment TRIDEC steering
- Cable length 5, 10 or 20m

Control-box

Stainless steel control-box with plastic cover, where the following functions and components are combined:

- Overpressure valves
- Electric height regulation valves
- Flow-control valves
- Suitable for Load-Sensing hydraulics

Sensor sets

- 2 Ride height-sensor sets for Left and Right
- Each with double approximation sensors with LED indication
- Required cables, 5 or 10m

TRIDEC, Transport Industry Development Centre B.V., Ekkersrijt 6030, 5692 GA Son – The Netherlands
T +31 499 49 10 50, F +31 499 49 10 60, info@tridec.com, www.tridec.com

Application

Tritronic Trailer Management System

Tritronic

TRIDEC Tritronic Trailer Management System is an addition the MD-O hydraulic suspension. Tritronic controls vital trailer-functions by one single powerful remote; such as suspension and steering system among many others.
Clear menus, a large display and a logical key structure offer the operator the greatest ease of control. The wireless remote transmits a secured bluetooth signal. Different to most common wireless systems, the bluetooth signal is insensitive for metal obstacles. For safety reasons, most functionalities are switched-off at higher speed.
Tritronic offers a unique combination of functionality, safety and ease of control, revolutionary in the off-road industry.

Suspension

Tritronic automatically controls the correct ride-height for TRIDEC hydraulic suspensions. After loading and unloading, ride-height deviations are automatically corrected. The remote allows for manual suspension height corrections (left and right separately). Tritronic also controls one or more lift-axles. If cargo-load demands, the lift-axle(s) are lowered automatically. A load indication system informs about cargo load, vehicle weights and axle loads. A warning is provided upon overloading.
With level-control the chassis is set at spirit level, allowing tipping at a cross-slope, without rolling over. Slope-control keeps the chassis automatically level, or at a fixed angle, while driving on a changing cross-slope.
Drawbar functions, such as suspension, top-cylinder and support leg are obviously also controlled by the same remote.

Steering system & Extra functions

Tritronic controls the alignment of the TRIDEC hydraulic steering system, as many extra functions such as, e.g. activating the tipping body, the door and signal-lights, among many others.

TRIDEC, Transport Industry Development Centre B.V., Ekkersrijt 6030, 5692 GA Son – The Netherlands
T +31 499 49 10 50, F +31 499 49 10 60, info@tridec.com, www.tridec.com

Technical specification

Code	Description
1914	Automatic height-control Tritronic MD-O

Tritronic MD-O is a complete plug & play electronic-hydraulic system, configured to your custom demands by TRIDEC, consisting of following components:

Control-box

- Stainless steel box with plastic cover
- Modular hydraulic block, assembled according required functionality
- Suitable for Load-Sensing hydraulics
- Switchbox, for activating all valves and relays (max. 20A simultaneous)
- Manual control of hydraulic functions possible

Remote

- Simple menu structure
- Large LCD display
- Programmable in several languages
- Start-up possible in max. 4 different languages
- Bluetooth communication with computer
- 8 hours continuous operational, 3 weeks standby-time
- Splash-proof according to IP54 classification
- Charger, holder and key-chain included
- Easy to replace and synchronise with computer

Computer

- Placeable anywhere underneath trailer
- Robust design with moulded-in electronics
- Dust- and waterproof according to IP67 classification
- State of the art gilded Souriau connectors
- Bluetooth, CAN – BUS and Point-to-Point communication

Main switch

- Robust design with moulded-in electronics
- Dust- and waterproof according to IP67 classification
- Low steering pressure warning lamp
- Antenna

TRIDEC, Transport Industry Development Centre B.V., Ekkersrijt 6030, 5692 GA Son – The Netherlands
T +31 499 49 10 50, F +31 499 49 10 60, info@tridec.com, www.tridec.com

Sensor-sets
- Two ride-height sensor-sets for Left and Right
- Dust- and waterproof according to IP67 classification
- All required cables (with extension cables)

Cables
- State-of-the-art gilded Souriau connectors
- Dust- and waterproof according to IP67 classification
- Available in several lengths and with extension cables
- All required cables supplied by TRIDEC

General
- 12V system
- EMC and ISO7637 approved, RDW E4 certified (E4-R10-032273 & 4)

Tritronic Options

Code	Description
1940	Extra ride height TRITRONIC

- Option for code 1914 'Automatic height-control Tritronic'
- Automatic ride-height control 2nd ride-height

Code	Description
1917	Lift-axle function to lift 1 axle

- Possibility to lift one axle
- Two hydraulic lift-axle valves, to be positioned nearby the suspension cylinders
- All required cables (with extension cables)

Code	Description
1918	Lift-axle function to lift 2 axles

- Possibility to lift two axles separately
- Two hydraulic lift-axle valves, to be positioned nearby the suspension cylinders
- All required cables (with extension cables)

TRIDEC, Transport Industry Development Centre B.V., Ekkersrijt 6030, 5692 GA Son – The Netherlands
T +31 499 49 10 50, F +31 499 49 10 60, info@tridec.com, www.tridec.com

Code	Description
1973	Traction-help by temporarily lift-axle activation

- Option for code 1917 'lift-axle function'
- Lift-axle is temporarily (10s) lifted, generating additional traction

Code	Description
1975	Semi-automatic lift-axle activation

- Option for code 1917 'lift-axle function'
- Lift-axle is automatically lowered, when the remaining axles tend to become overloaded
- Adjustable pressure sensor mounted at TRIDEC hydraulic suspension
- All required cables (with extension cables)

Code	Description
1991	Load indication system

- Load indication clearly displayed on the remote:
  - load per hydraulic zone (e.g. tow bar, suspension left and right
  - cargo load
  - combined trailer load
  - combined vehicle load
- Warning when overloading
- Pressure sensors mounted on TRIDEC accumulator manifolds
- Required cabling, with extension cables included
- By preference for 3-zone suspension systems. One, two and four zone systems possible upon request
- Accuracy ±2%
- Reading in kg, lbs and oz

Code	Description
1949	Automatic lift-axle activation

- Option for code 1917 'lift-axle function' and code 1991 'load indication system'
- Lift-axle is automatically raised when axle loads at the remaining axles permit: saving tires, fuel and adding drawbar load at empty runs
- Lift-axle is automatically lowered, when the remaining axles tend to become overloaded
- Lift-axle activation-loads are user adjustable
- Warning when drawbar is under- or over-loaded (only for 3-zone suspension systems)

TRIDEC, Transport Industry Development Centre B.V., Ekkersrijt 6030, 5692 GA Son – The Netherlands
T +31 499 49 10 50, F +31 499 49 10 60, info@tridec.com, www.tridec.com

Code	Description
1916	Level control

At command the chassis is set at spirit level, e.g. in order to safely raise the tipping body at a cross-slope.

- Spirit-level sensor
- Required cables (with extension cables)

Code	Description
1974	Slope control

While driving (at a cross-slope) the chassis is automatically set at a fixed angle relative to the slope, allowing for safe driving on a cross-slope without the risk of tumbling over

- Option for code 1916 'level control'
- Second spirit-level sensor
- Required cables (with extension cables)

Code	Description
1947	Repositioned connection point TRITRONIC remote control

Some circumstances might ask for abandoning the bluetooth signal and connecting the remote directly to the computer, such as e.g. nuclear environments or highly secured military airports.

- Cable computer – socket (2.5m or 10m)

TRIDEC, Transport Industry Development Centre B.V., Ekkersrijt 6030, 5692 GA Son – The Netherlands
T +31 499 49 10 50, F +31 499 49 10 60, info@tridec.com, www.tridec.com

Code	Description
1921	1 extra hydraulic function operated with Tritronic
1922	2 extra hydraulic functions operated with Tritronic

extra hydraulic functions

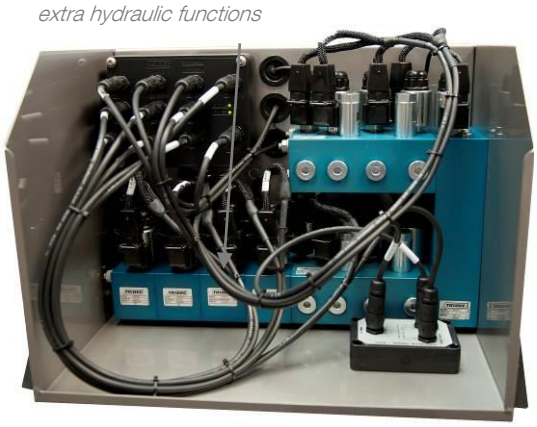

- Pulse, continuous and timed activation possible
- Additional valve block embedded into the control-box, with Normally Open valves and G3/8 connections
- Pump activation programmable
- Release by external signal, or switch programmable
- Manual emergency activation possible
- More than 2 extra functions possible at request

Some hydraulic applications might require additional hydraulic components such as check valves or balance valves, these components are not supplied by TRIDEC.

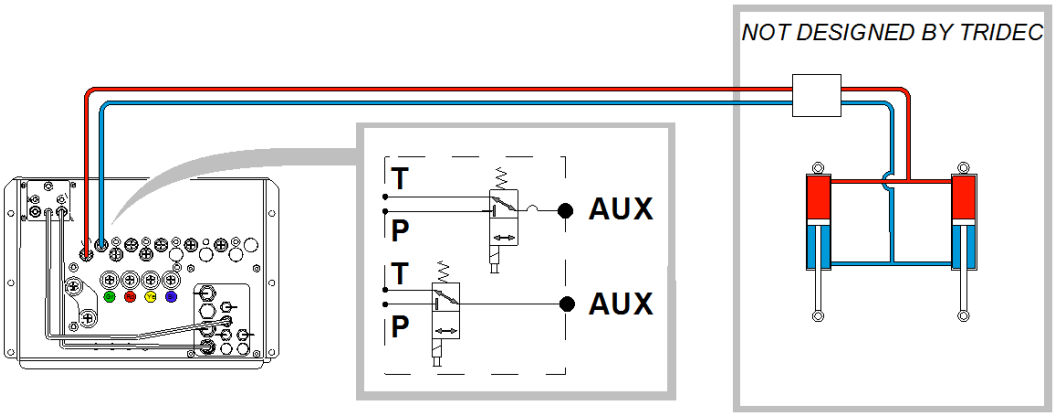

Code	Description
1931	1 extra electric function operated with Tritronic
1932	2 extra electric functions operated with Tritronic
1933	3 extra electric functions operated with Tritronic

- Pulse, continuous and timed activation programmable
- Direct connection to switchbox
- Max 8Amp per exit
- Pump activation programmable
- Release by external signal, or switch programmable
- State of the art gilded Souriau connectors
- More than 3 extra functions possible at request

TRIDEC, Transport Industry Development Centre B.V., Ekkersrijt 6030, 5692 GA Son – The Netherlands
T +31 499 49 10 50, F +31 499 49 10 60, info@tridec.com, www.tridec.com

Code	Descriptions
1977	Extra function release button

Some extra functions could cause dangerous situations, when (unintendedly) activated, such as e.g. use of ramps. To prevent unintended activation, an extra function can be expanded with a release button. Control of the designated function is only possible if the button is pressed (leaving 30s to start with activation). By preference the button is located nearby, and in view of the danger-zone.

- Robust button, dust- and water-proof according IP67 classification
- Including extension cable (5, 10 or 20m)

Code	Omschrijving
1929	Extra remote

- Easy to replace and synchronise with computer

Code	Omschrijving
1330	Extra remote holder or charge cable

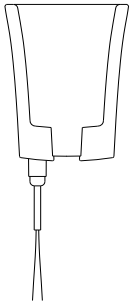

Holder – open end cable

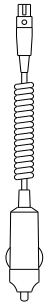

Charge cable – cigarette plug

A remote charging device is included. By choice either a holder with plugless charging and an open-end cable for permanent installation on to the dash board, or a charge cable with spiral cord equipped with “cigarette” plug. This code relates to an additional charging device, holder or cable.

TRIDEC, Transport Industry Development Centre B.V., Ekkersrijt 6030, 5692 GA Son – The Netherlands
T +31 499 49 10 50, F +31 499 49 10 60, info@tridec.com, www.tridec.com

Code	Description
1956	Drawbar suspension control with Tritronic

- Hydraulic drawbar height-control by Tritronic remote
- Automatic height control at ride height
- Sensor set, including required cables
- Expansion of hydraulic control-box with additional required components

Code	Description
1961	Top cylinder control with Tritronic

Control of top-cylinder:
- Length cylinder, for (de-)coupling
- Temporarily pressure increasement

- Expansion of hydraulic control-box with additional required components
- Required cables, 10m length

Code	Description
1982	Extra cable remote control Tritronic (2 buttons)
1983	Extra cable remote control Tritronic (4 buttons)
1984	Extra cable remote control Tritronic (6 buttons)
1985	Extra cable remote control Tritronic (8 buttons)
1986	Extra cable remote control Tritronic (10 buttons)
1987	Extra cable remote control Tritronic (12 buttons)

The Tritronic system can be equipped with an additional cable remote, which is operated in addition to the standard (wireless) remote. This additional remote is positioned fixed to the trailer.

- Direct engagement of the switchbox
- Large robust buttons
- 2 to 12 buttons possible (for controlling 1-6 functions) per remote
- All required cables (with extension cables)
- If more than 12 buttons are requires, a second remote is positioned

TRIDEC, Transport Industry Development Centre B.V., Ekkersrijt 6030, 5692 GA Son – The Netherlands
T +31 499 49 10 50, F +31 499 49 10 60, info@tridec.com, www.tridec.com

Dimensions

Control-box

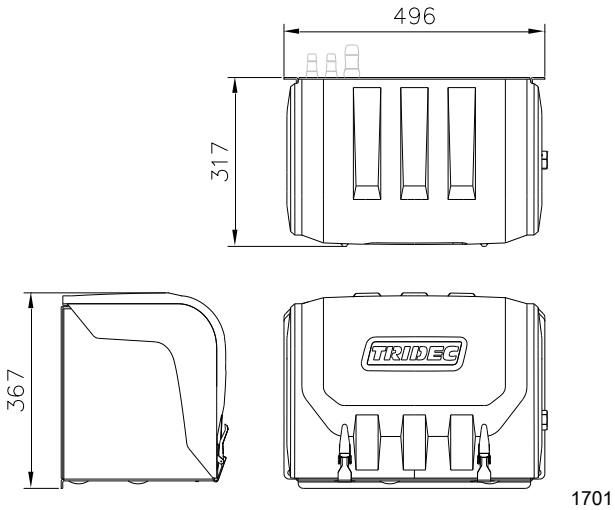

Code 1982 – 1987: Extra cable control remote

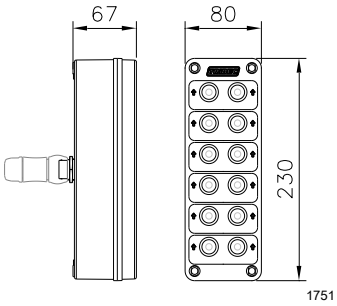

Computer

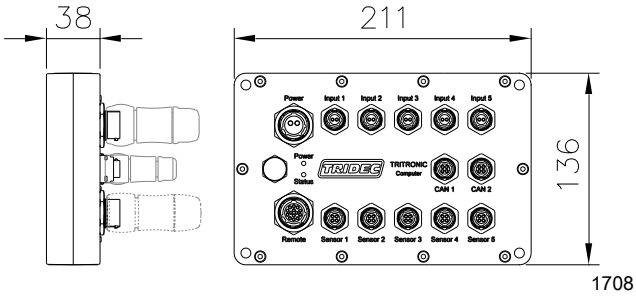

Mode-switch

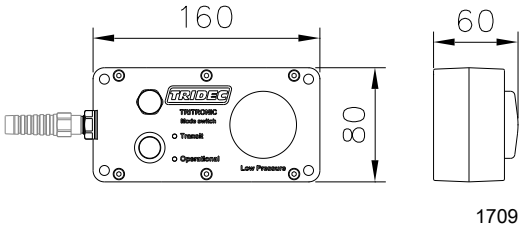

TRIDEC, Transport Industry Development Centre B.V., Ekkersrijt 6030, 5692 GA Son – The Netherlands
T +31 499 49 10 50, F +31 499 49 10 60, info@tridec.com, www.tridec.com

Order references

MD-O suspension

Code	Description
1901	1 axle line MD-O 10T with cylinder clamps
1902	2 axle lines MD-O 10T with cylinder clamps
1903	3 axle lines MD-O 10T with cylinder clamps
1904	4 axle lines MD-O 10T with cylinder clamps

MD-O steering system

Code	Description
1905	Steering system 1 axle
1906	Steering system 2 axles

TD-O drawbar

Code	Description
1951	Drawbar TD-O, including hydraulic landing leg. Rubber suspended
1950	Drawbar TD-O, including hydraulic landing leg. Prepared for hydraulic drawbar suspension

Options

1912	Steering system 1 axle in combination with drawbar TD-O
1913	Steering system 2 axles in combination with drawbar TD-O
1955	Hydraulic drawbar suspension including mounting parts and accumulators
1960	Top cylinder TD-O, including ladder mounting plate and mounting support drawbar

Semi-automatische height-control MD-O

Code	Description
1915	Semi-automatic height control MD-O with stainless steel box + cover

TRIDEC, Transport Industry Development Centre B.V., Ekkersrijt 6030, 5692 GA Son – The Netherlands
T +31 499 49 10 50, F +31 499 49 10 60, info@tridec.com, www.tridec.com

Automatic height-control Tritronic MD-O

Code	Description
1914	Automatic height-control Tritronic

Options

1940	Extra ride height Tritronic
1971	Lift-axle function to lift 1 axle
1972	Lift-axle function to lift 2 axles
1973	Traction-help by temporarily lift-axle activation
1975	Semi-automatic lift-axle activation
1991	Load indication system
1949	Automatic lift-axle activation
1916	Level control
1974	Slope control
1921	1 extra hydraulic function operated with Tritronic
1922	2 extra hydraulic functions operated with Tritronic
1931	1 extra electric function operated with Tritronic
1932	2 extra electric functions operated with Tritronic
1933	3 extra electric functions operated with Tritronic
1977	Extra function release button
1947	Repositioned connection point TRITRONIC remote control
1929	Extra remote
1930	Extra remote holder or charge cable
1956	Drawbar suspension control with Tritronic
1961	Top cylinder control with Tritronic
1982	Extra cable remote control Tritronic (2 buttons)
1983	Extra cable remote control Tritronic (4 buttons)
1984	Extra cable remote control Tritronic (6 buttons)
1985	Extra cable remote control Tritronic (8 buttons)
1986	Extra cable remote control Tritronic (10 buttons)
1987	Extra cable remote control Tritronic (12 buttons)

The information contained in this document gives an indication of the possibilities. Not all exceptional models are included in this document. Please contact our sales department to determine whether a particular configuration of the system can be used in your trailer or that special solutions are possible.

Sales contact

TRIDEC Transport Industry Development Centre B.V.
Ekkersrijt 6030, 5692 GA SON – the Netherlands
Phone: +31 499 49 10 52
Fax: +31 499 46 00 58
E-mail: sales@tridec.com

TRIDEC, Transport Industry Development Centre B.V., Ekkersrijt 6030, 5692 GA Son – The Netherlands
T +31 499 49 10 50, F +31 499 49 10 60, info@tridec.com, www.tridec.com